YINGJIAO®

YDC180 SERIES 180W



Yingjiao's AC/DC DIN rail type security power are designed with slim plastic housing and for full range AC input from 90V AC to 264V AC, and supplies 13.8VDC and 27.6VDC at output, respectively.They have high efficiency and operate in wide temperature range.
In addition to the key protection features such as overload protection, over voltage protection, battery low cut off,and battery reverse polarity protection (by fuse). the alarm signal for AC OK and battery low signaling is provided,via relay contact output.

Features

- Universal AC Input/ Full Range
- Cooling by free air convection
- High operating temperature up to 70 ℃
- Higher Efficiency
- Protection:Short Circuit/Overload/ Over Voltage
- Three Years Warranty

YINGJIAO®

Model Information

Yingjiao Part Number	DC Voltage	Rated Current	Rated Power	CURRENT RANGE	VOLTAGE ADJ.RANGE
YDC180-13.8	13.8V	9A/4A(charger)	179.4W	0~13A	12~15V
YDC180-27.6	27.6V	4.5A/2A(charger)	179.4W	0~6.5A	24-29V

Input

VOLTAGE RANGE	90-264VAC/127-370VDC	
	[DC input operation possible by connecting AC/L(+), AC/N(-)]	
FREQUENCY RANGE	47-63Hz	
EFFICIENCY(Typ.)	88%	YDC180-13.8
	90%	YDC180-27.6
AC CURRENT(Typ.)	2.5A/115VAC	
	1.5A/230VAC	
INRUSH CURRENT(Typ.)	COLD START 35A/115VAC 70A/230VAC	

Output

RIPPLE & NOSE(max.)	150mVp-p	YDC180-13.8
	240mVp-p	YDC180-27.6
VOLTAGE TOLERANCE	±1.0%	
LINE REGULATION	±0.5%	
LOAD REGULATION	±0.5%	YDC180-13.8
	±0.5%	YDC180-27.6
SETUP,RISE TIME	2000ms, 30ms/230VAC at full load	
	2000ms, 30ms/115VAC at full load	
HOLD UP TIME (Typ.)	20ms/230VAC at full load	
	20ms/115VAC at full load	

Protection

OVER LOAD	105%-150% Rated Output Power	
	Protection type: Hiccup mode, recovers automatically	
	after fault condition is removed.	
OVER VOLTAGE	CH1:15.8~19.5V	YDC180-13.8
	CH1:30.5~37.7V	YDC180-27.6
	Protection type : Shut down o/p voltage, re-power on to recover	
OVER TEMPERATURE	Shut down o/p voltage, re-power on to recover	
BATTERY CUT OFF	10±0.5V	
	20±1V	

FUNCTION

AC OK	Relay contact output, Closed:AC OK;
	Open:AC Fail; Max. rating: 30V/1A
BATTERY LOW	Relay contact output, Open: Battery OK;
	Closed: Battery Low; Max. rating: 30V/1A
	Battery low voltage :<11V
	Battery low voltage : < 22V

Environment

WORKING TEMP.	-20 ℃ to +70 ℃ (Refer to "Derating Curve")
Working Humidity	20 ~ 90% RH Non-Condensing
STORAGE TEMP, HUMIDITY	'-20℃ ~+85℃,10 ~ 95% RH non-condensing
TEMP. COEFFICIENT	± 0.03%/℃(0~50℃) on CH1 output
VIBRATION	10~ 500Hz, 5G 10min./1cycle, 60min. each along X, Y,Z axes
OPERATING ALTITUDE	5000 meters /OVC Ⅱ
OVER VOLTAGE CATEGORY	II;According to Dekra BS EN/EN62368-1; altitude up to 5000 meters
MTBF	1536.3K hrs min. Telcordia SR-332 (Bellcore)

SAFETY & EMC

SAFETY STANDARDS	UL62368-1, TUV BS EN/EN62368-1,
	EAC TP TC 004, AS/NZS 62368.1 approved
WITHSTAND VOLTAGE	I/P-O/P:3KVAC I/P-FG:2KVAC O/P-FG:0.5KVAC
ISOLATION RESISTANCE	I/P-O/P, I/P-FG, O/P-FG:100M Ohms/ 500VDC/25 ℃/70% RH
EMC EMISSION	Compliance to BS EN/EN55032 (CISPR32) Class B,
EMC IMMUNITY	Compliance to BS EN/EN61000-4-2,3,4,5,6,8,11,BS EN/EN55035

Note

1.All parameters NOT specially mentioned are measured at 230VAC input, rated load and 25℃ of ambient temperature.

2.Ripple & noise are measured at 20MHz of bandwidth by using a 12" twisted pair-wire terminated with a 0.1uf & 47uf parallel capacitor.

3.Tolerance : includes set up tolerance, line regulation and load regulation.

4.Length of set up time is measured at first cold start. Turning ON/OFF the power supply may lead to increase of the set up time.

5.Please refer to suggested Application 2.(2) - (3) in page 4.

6.The power supply is considered a component which will be installed into a final equipment. The final equipment must be re-confirmed that it still meets EMC directives. For guidance on how to perform these EMC tests, please refer to"EMI testing of component power supplies."

7.The ambient temperature derating of 5℃/1000m is needed for operating altitude greater than 2000m(6500ft).

Dimensions & Weight

Length:	63mm/2.48in
Width:	125mm/4.92in
Height:	113.5mm/4.47n
Weight:	1.1g

Packing

Carton Size:	52.5 x 33 x 17.5 CM
	20.67 x 12.99 x 6.89 in
Master Carton Quantities:	10pcs/Carton

Dimensions and Installation

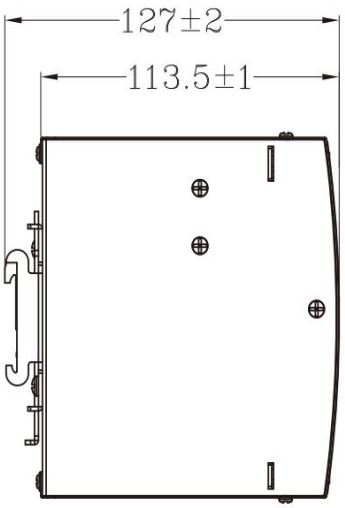

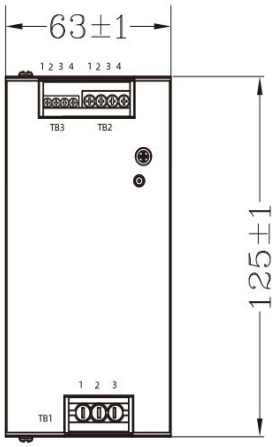

Terminal Pin No. Assignment (TB1)

Pin No.	Assignment
1	FG ⏚
2	AC/N
3	AC/L

Terminal Pin No. Assignment (TB3)

Pin No.	Assignment
1,2	AC OK
3,4	Bat. Low

Terminal Pin No. Assignment (TB2)

Pin No.	Assignment
1	+V
2	-V
3	Bat+
4	Bat-

⚠

1.-V and Bat- can not be shorted.

Block Diagram

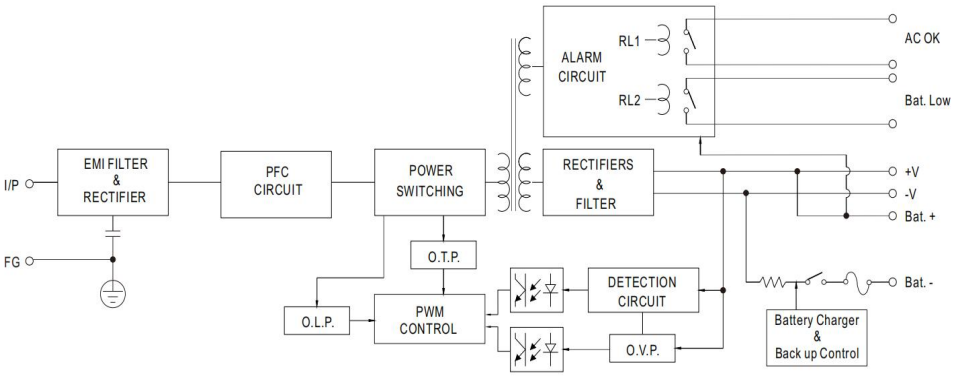

Deduction curve and temperature

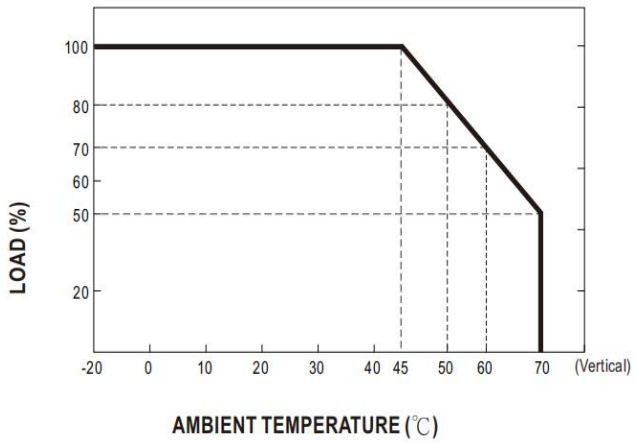

Minus output and input voltage curves

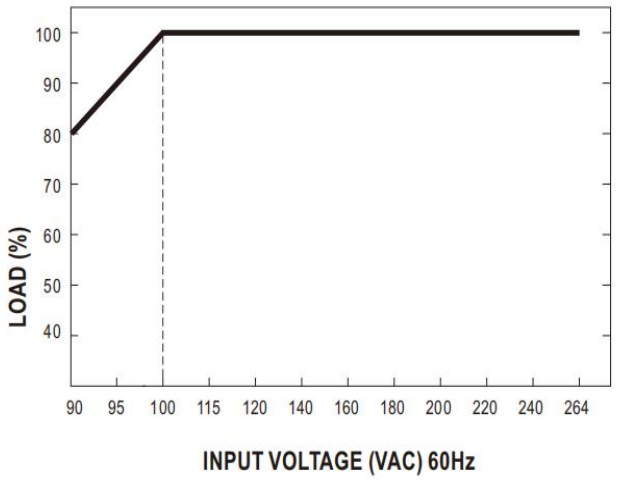

Suggested Application

1.Backup connection for AC interruption

(1) Please refer to the Fig1.1 for suggested connection.

The power supply charges the battery and provides energy to the load at the same time when the AC main is OK.

The battery starts to supply power to the load when the AC mains fails.

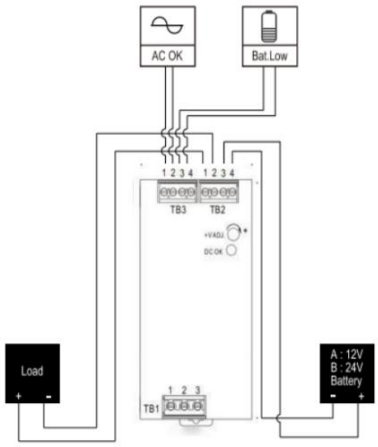

Fig 1.1 Suggested system connection

2.Alarm signal for AC OK and Battery Low

(1) Alarm signal is sent out through "AC OK" & " Battery Low " pins. (relay contact type)

(2) An external voltage source is required for this function.

The maximum applied voltage is 30V and the maximum sink current is 1A.

(3) Table2.1 explains the alarm function built in the power supply

Function	Description	Output of Alarm
AC OK	when the power supply turns ON	Closed
	when the power supply turns OFF	Open
Battery Low	when the voltage of battery is under A:11V, B:22V	Closed
	when the voltage of battery is above A:11V, B:22V	Open

Table 2.1 Explanation of Alarm Signal

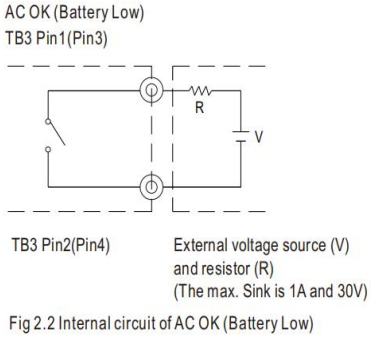

Fig 2.2 Internal circuit of AC OK (Battery Low)

(4) RL1 (AC OK)signal will go into hiccup mode when the overload protection is activating.